Subfounder Group F
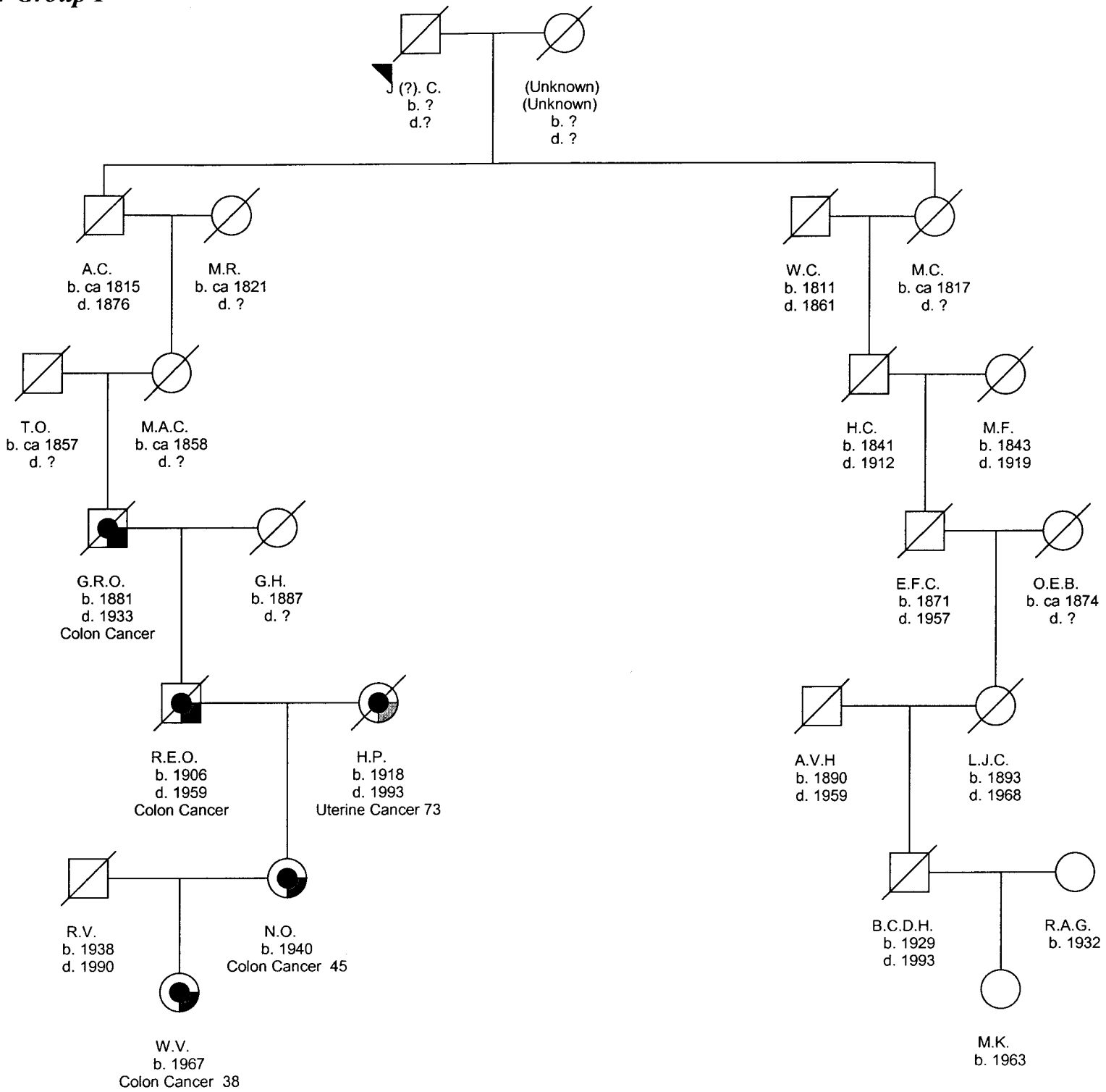
3/31/2008