Subfounder Group G
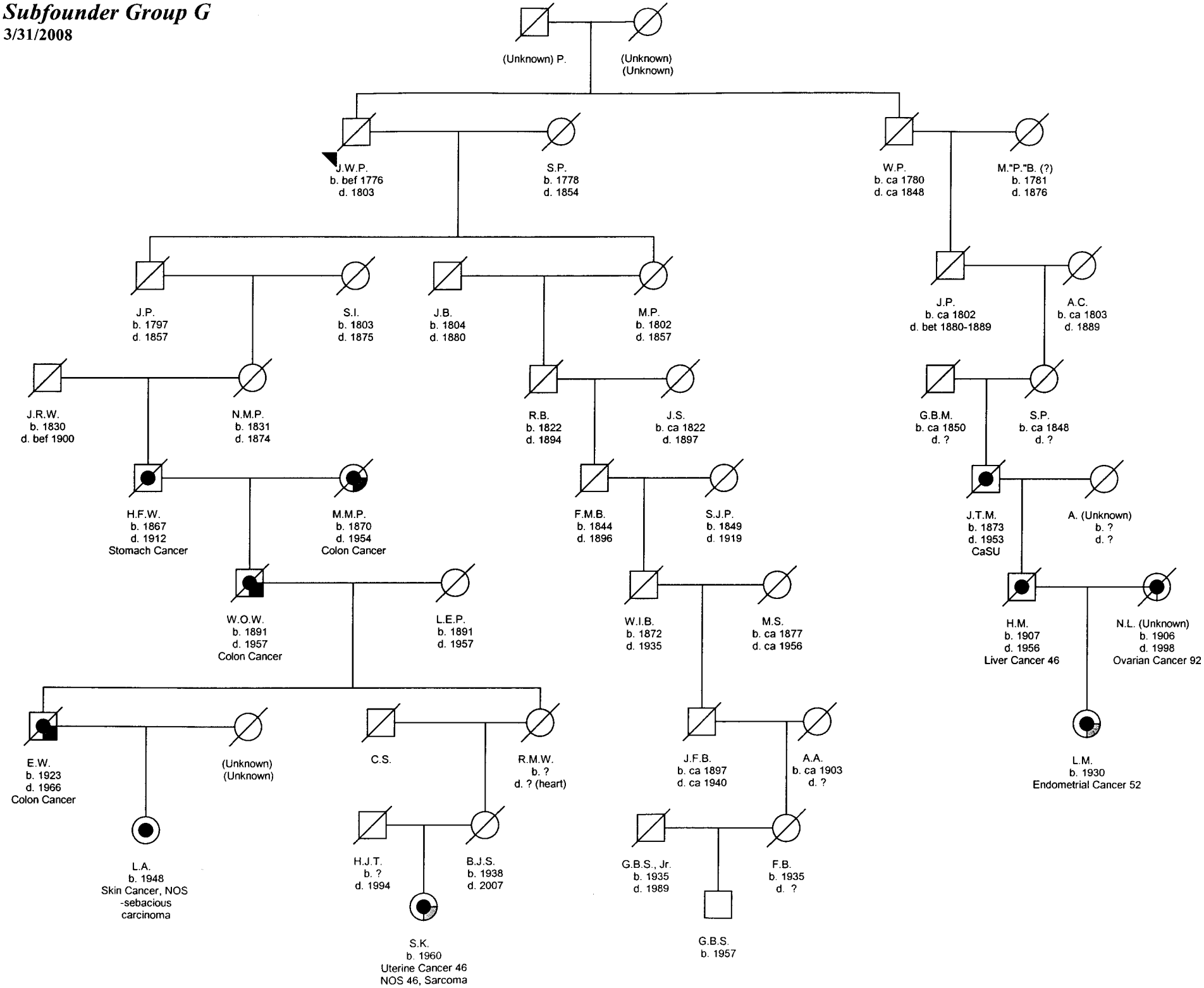
3/31/2008