Subfounder Group B
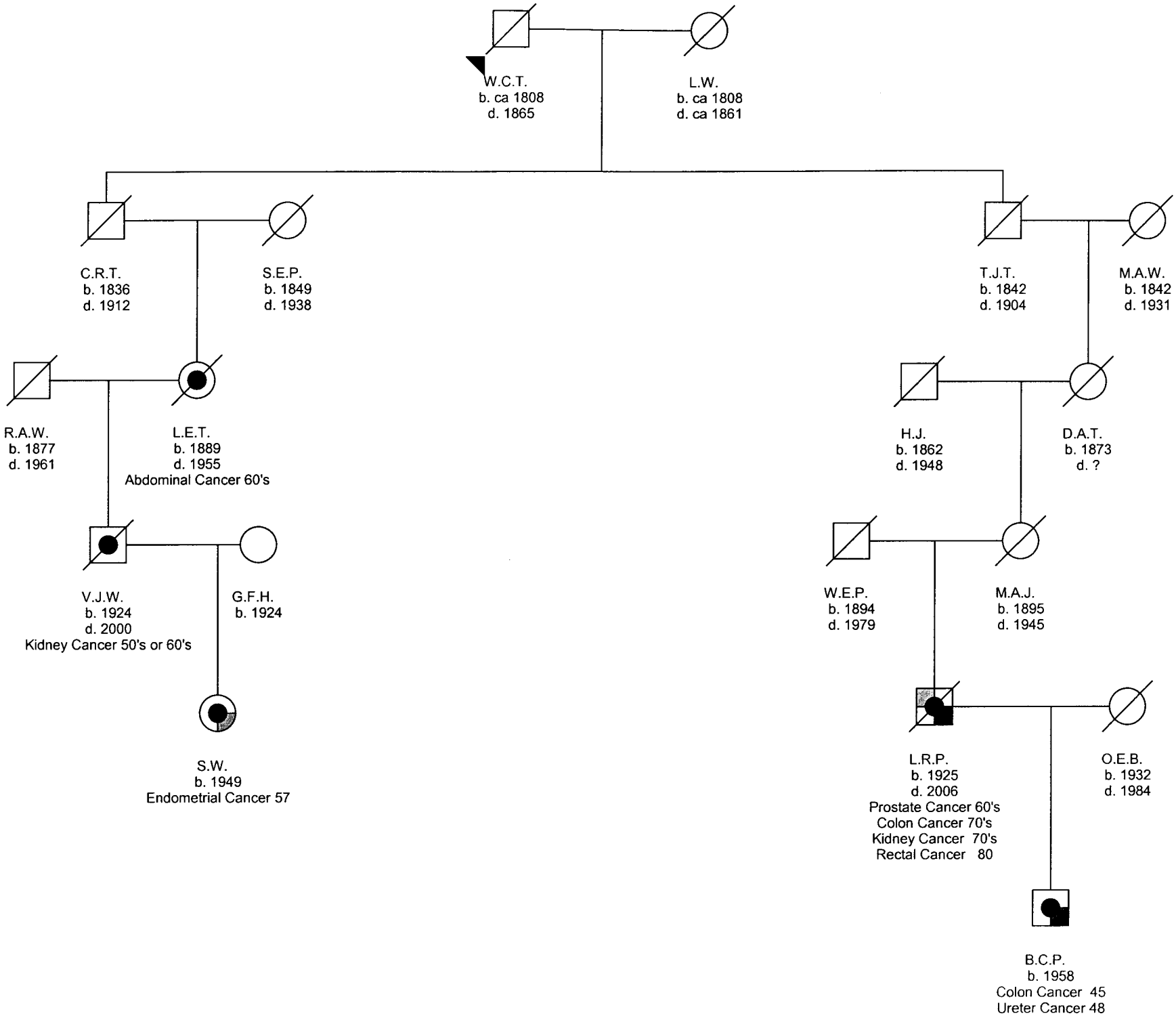
3/31/2008