Subfounder Group E
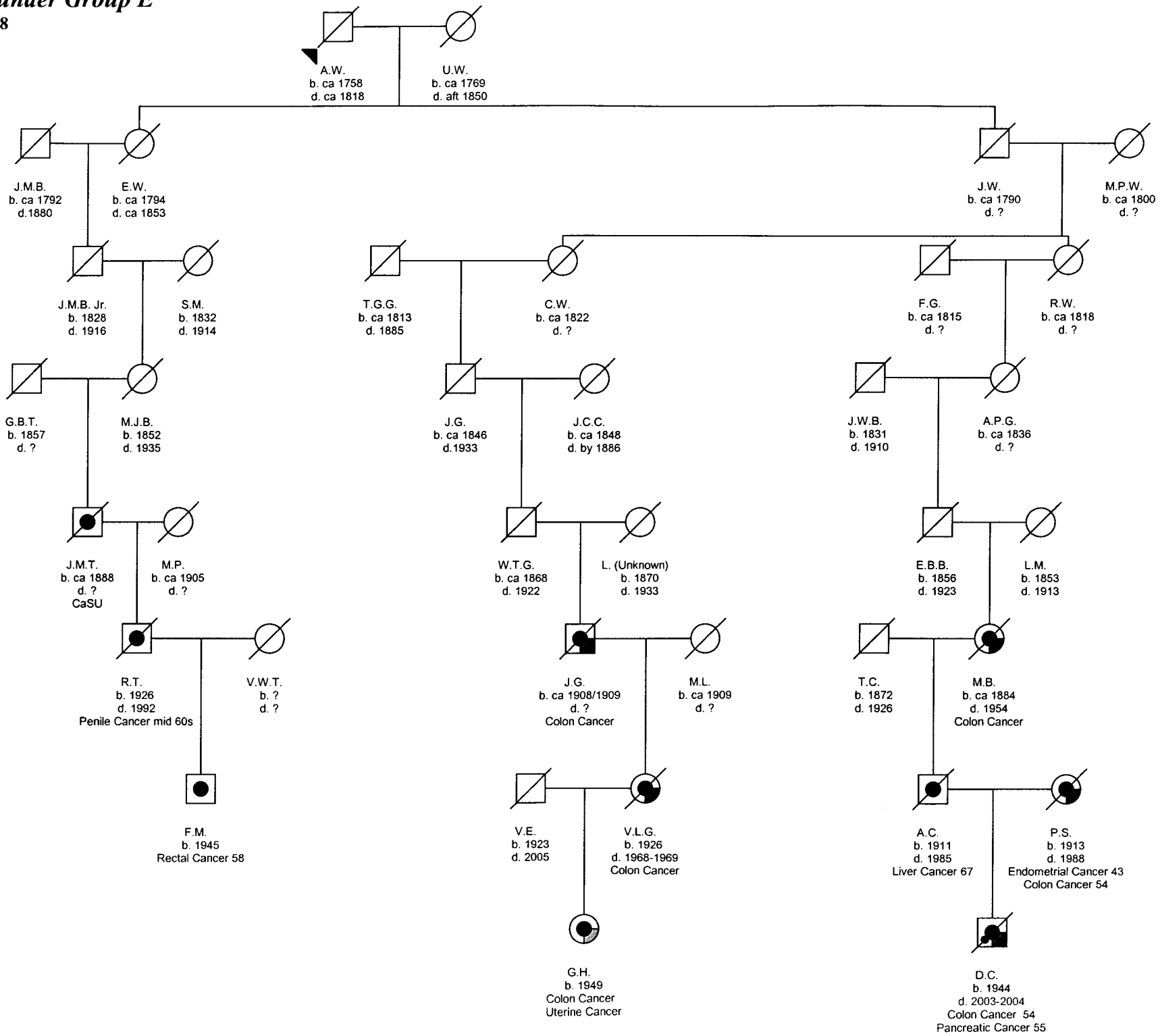
3/31/2008